

SDOWN

Item code	**86.OC02.4331.01**
Product type	**Outdoor**
Category	**Surface Ceiling Downlight**
Family	**SDOWN**
Pictograms	

Dimensions	
Product dimensions (mm)	**Ø140X162 mm**

Scheme

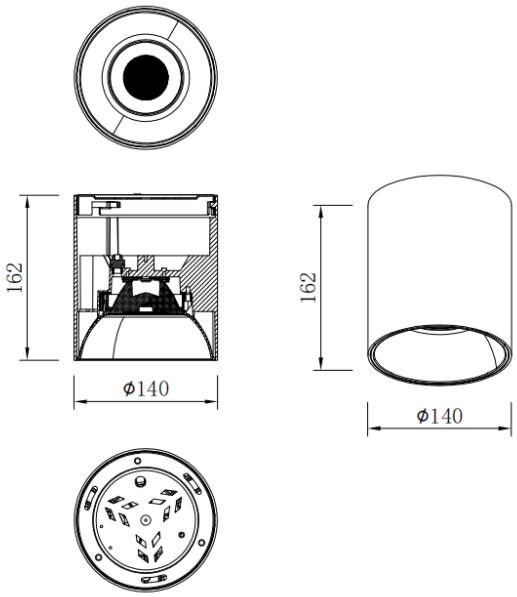

Product	
Real power (W)	**40**
Real luminous flux (Lm)	**3200**
Luminous efficiency (Lm/W)	**80**
Beam angle (º)	**60**
Life time (h)	**50000h L80B10**
IP	**IP65**
Control gear	**ON-OFF**
Colour temperature (K)	**3000**
Colour consistency (SDCM)	**SDCM3**
CRI	**80**